YANMAR
Solutioneering Together

LV Series Data - Dimensions

L48V

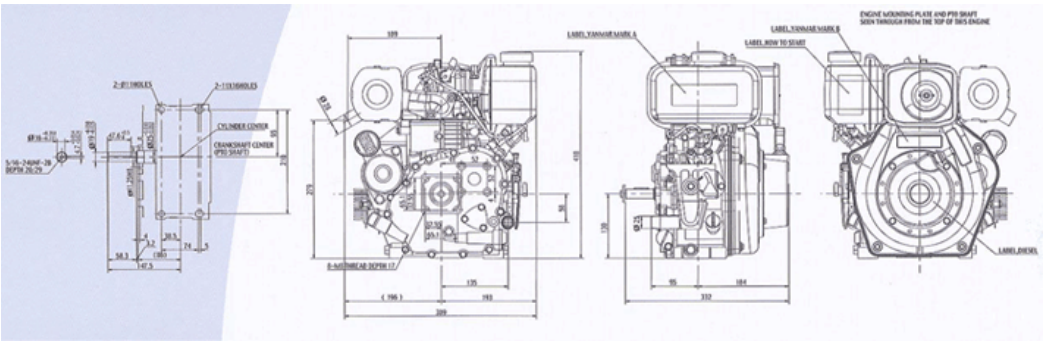

L70V

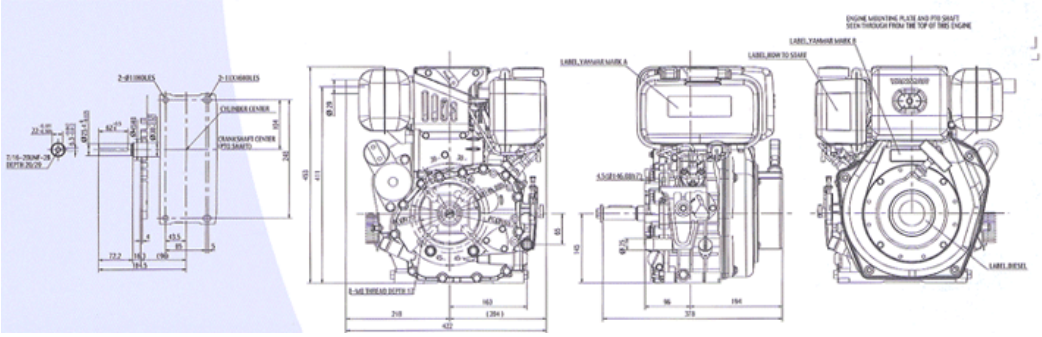

L100V

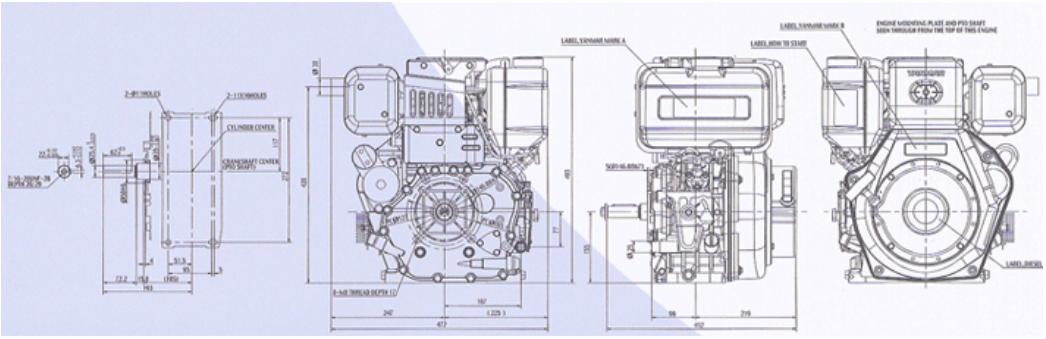

Copyright(C) 2010 YANMAR Co.,Ltd. All right reserved.